DATA SHEET

PRODUCT	**Molding Type Power Choke**
SERIES	AIP0420MB
PART NO.	
DESCRIPTION	
ISSUE DATE	2023/06/19
REVISION DATE	2023/06/19
REFERENCE NO.	ENS000140660

RoHS COMPLIANCE ITEM



Disclaimer:
- This datasheet is downloaded from the Website of Walsin Technology Corporation, and Walsin Technology Corporation reserves all rights for modification content without further notification.
- All product, specification and data are subject to change without notice.
- Walsin Technology Corporation, its affiliates, agents, employees, and all persons acting on its or their behalf, hereby disclaim any and all liability for any errors, inaccuracies or incompleteness contained in any product related information, including but not limited to product specifications, datasheets, pictures and/or graphics.
- Walsin Technology Corporation makes no warranty, representation or guarantee regarding the suitability of the products for any particular purpose or the continuing production of any product. It is the customer's responsibility to validate that a particular product is suitable for use in a particular application.
- To the maximum extent permitted by applicable law, Walsin Technology Corporation disclaims (i) any and all liability arising out of the application or use of any product, (ii) any and all liability, including without limitation special, consequential or incidental damages, and (iii) any and all implied warranties, including warranties of fitness for particular purpose, non-infringement and merchantability.
- If you have any questions, please contact our sales staff.

Copyright © by Walsin Technology Corporation. | All rights reserved.

Molding Type Power Choke Engineering Specification

1. Features

.

- ROHS, Halogen Free and REACH compliance
- Flux shielded structure
- High rated current
- 125 °C maximum total temperature operation
- 4.75x4.45x2.0 mm maximum surface mount package
- Low core loss
- Ultra low buzz noise due to molding construction
- MSL Level 1

2. Applications

- Laptops and PCs
- Switch and servers
- Base stations
- DC / DC converters
- SSD modules
- Battery powered devices

3. Explanation of Part Number

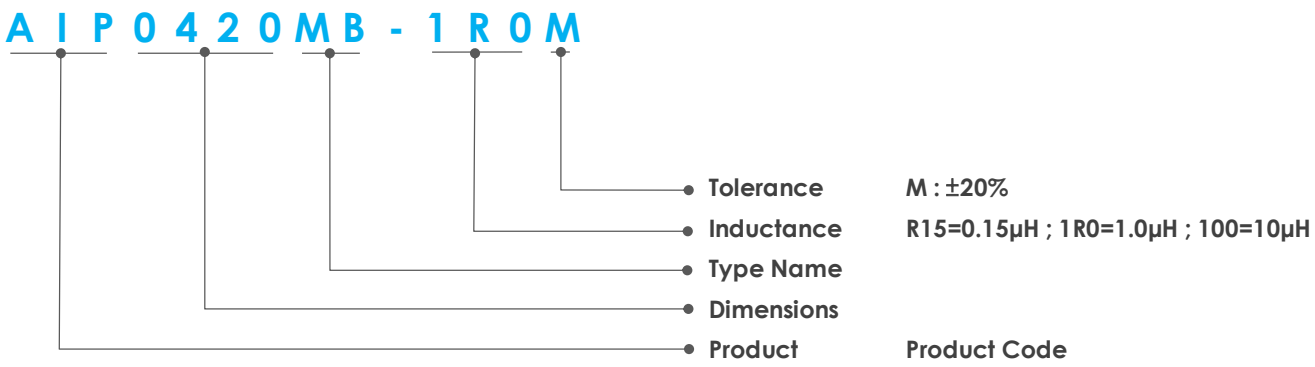

Copyright © by Walsin Technology Corporation. | All rights reserved.

4. Shapes and Dimensions

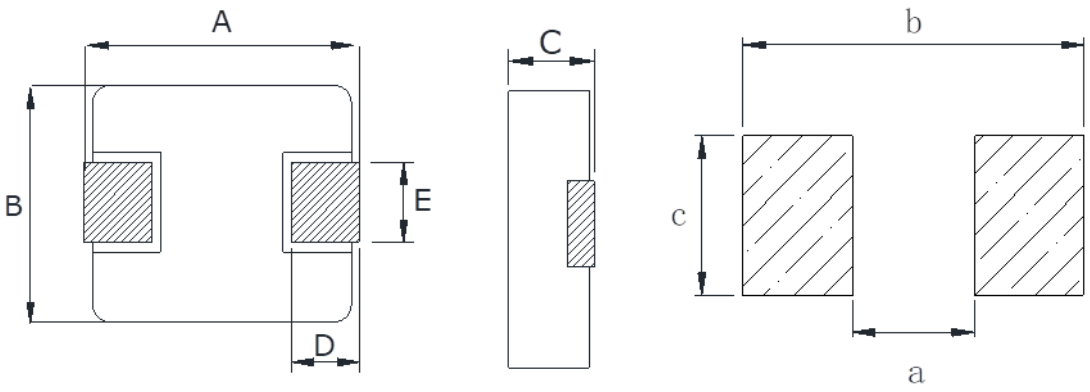

Recommend Land Pattern

unit (mm)

A	B	C	D	E	a Typ.	b Typ.	c Typ.
4.4±0.35	4.2±0.25	1.8±0.2	0.8±0.3	2.0±0.3	2.2	5.2	2.5

5. Marking

The inductor is marked with a 3-digit code (using ink for marking).

Example: R24 means 0.24μH
1R0 means 1.0μH
100 means 10μH

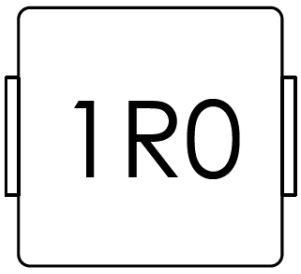

Copyright © by Walsin Technology Corporation. | All rights reserved.

6. Structure and Components

Symbo	Component	Material
a	Marking	Ink (black)
b	Core	Alloy sponge powder
c	Wire	Polyurethane copper wire
d	Terminal	Copper plated with Sn

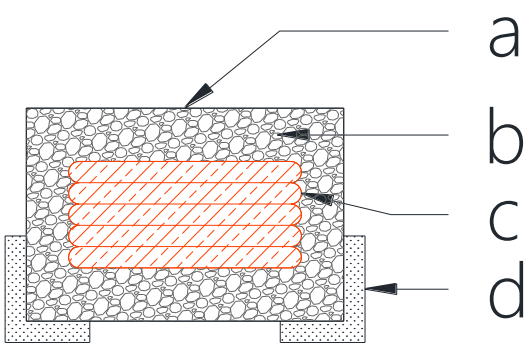

Copyright © by Walsin Technology Corporation. | All rights reserved.

7. Electrical Specification

4x4 Series PN	Li [μH] Initial Value +/-20%	Rdc [mΩ] DC resistance max.	Isat [A] Li drop 30% typ.	Irms [A] Temp. rising 40°C typ.
AIP0420MB-R10M	0.1	4	22	13
AIP0420MB-R22M	0.22	6.6	12.5	9.5
AIP0420MB-R33M	0.33	11	12	10
AIP0420MB-R47M	0.47	14	9.5	7.5
AIP0420MB-R56M	0.56	16	9	7
AIP0420MB-R60M	0.6	18	8	7
AIP0420MB-R68M	0.68	18	8	7
AIP0420MB-1R0M	1	27	7	6
AIP0420MB-1R2M	1.2	27	6.5	6
AIP0420MB-1R5M	1.5	46	5.5	5
AIP0420MB-2R2M	2.2	58	5	4.5
AIP0420MB-3R3M	3.3	87	3.5	3.3
AIP0420MB-4R7M	4.7	89	3	2.8
AIP0420MB-6R8M	6.8	175	2.5	2.4
AIP0420MB-100M	10	282	2	1.6
AIP0420MB-220M	22	363	1.4	1.2

Notes

1. Test environment of all data is referenced to 25 °C ambient.
2. Test conditions: 100 KHz, 1Vrms.
3. Isat : DC current (A) that will cause L to drop approximately 30 %.
4. Irms : DC current (A) that will cause an approximate ΔT of 40 °C (reference ambient temperature is 25°C).
5. Operating temperature range – 55 °C to + 125 °C.
6. The part temperature (ambient + temp rise) should not exceed 125 °C under worst case operating conditions. Circuit design, component placement, PWB trace size and thickness, airflow and other cooling provisions all affect the part temperature. Part temperature should be verified in the end application.

Copyright © by Walsin Technology Corporation. | All rights reserved.

8. Recommended Soldering Technologies

- **Re-flowing Profile**

  - Preheat condition : 150 ~ 200 °C / 60 ~ 120 sec.
  - Allowed time above 217 °C : 60 ~ 90 sec.
  - Max temp : 260 °C.
  - Max time at max temp : 5 sec.
  - Solder paste : Sn / 3.0Ag / 0.5Cu.
  - Allowed Reflow time : 2 times.

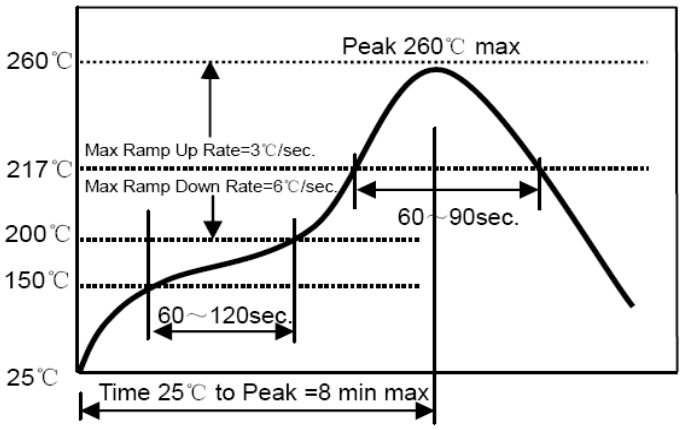

- **Iron Soldering Profile**

  - Iron soldering power : Max. 30W.
  - Pre-heating : 150 °C / 60 sec.
  - Soldering Tip temperature : 350 °C max.
  - Soldering time : 3 sec. max.
  - Solder paste : Sn / 3.0Ag / 0.5Cu.
  - Max.1 times for iron soldering.

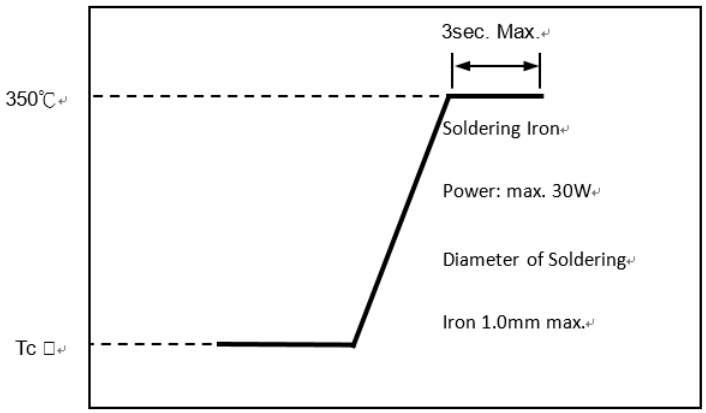

Copyright © by Walsin Technology Corporation. | All rights reserved.

9. Packing

- **Reel dimensions (unit : mm)**

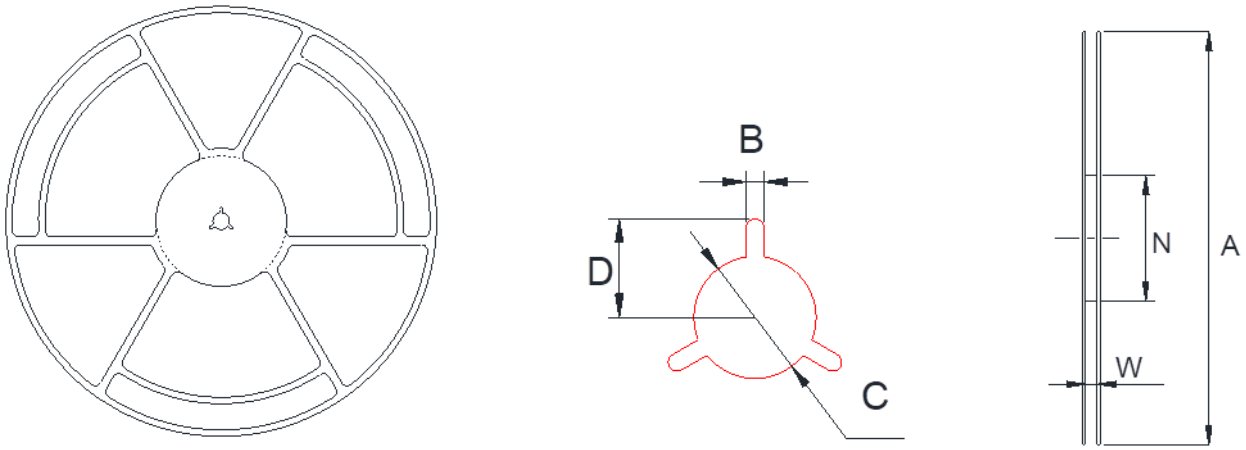

A	W	N	B	C	D
330+2.0	12.8+0.2	97+0.5	2.2+0.5	13.0±0.2	10.75±0.25

- **Tape dimensions**

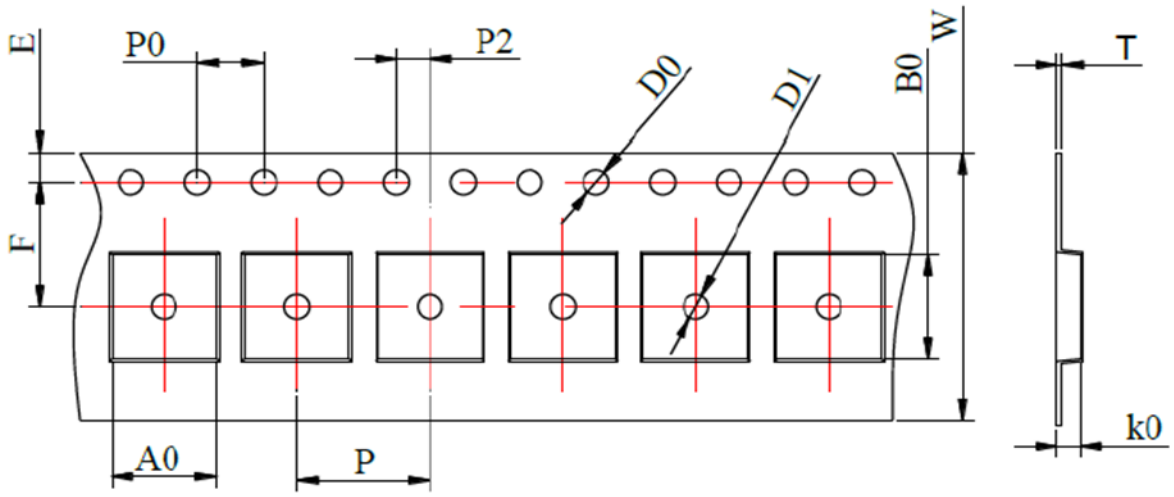

Type	Tape dimensions (unit : mm)											
	W	P	P0	P2	D0	D1	T	A0	B0	K0	E	F
AIP0420MB	12 ±0.3	8 ±0.1	4 ±0.1	2 ±0.1	1.5 ±0.1	1.5 ±0.1	0.35 ±0.05	4.5 ±0.1	4.85 ±0.1	2.3 ±0.1	1.75 ±0.1	5.5 ±0.1

Copyright © by Walsin Technology Corporation. | All rights reserved.

- **Taping Drawings (unit : mm)**

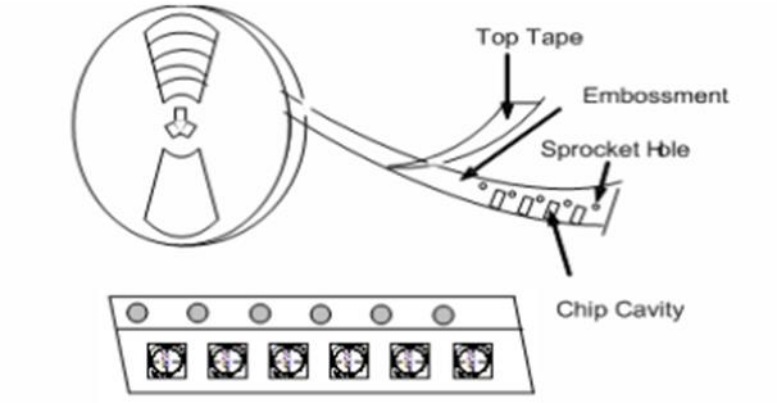

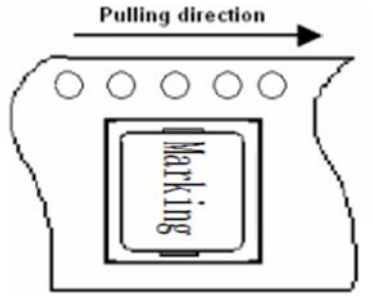

- **Label Marking**

The label specified as follows shall be put on the side of reel.
(1) Part No.
(2) Quantity.
(3) Lot No.
* Part No. And Quantity shall be marked on outer packaging.

- **Quantity of products in the package**

Type	Standard Quantity
AIP0420MB	3000 pcs / reel

- **Quantity of products in the package**

The peel speed shall be about 300 mm / minute.
The peel force of top cover tape shall be between 0.1 to 1.3N.

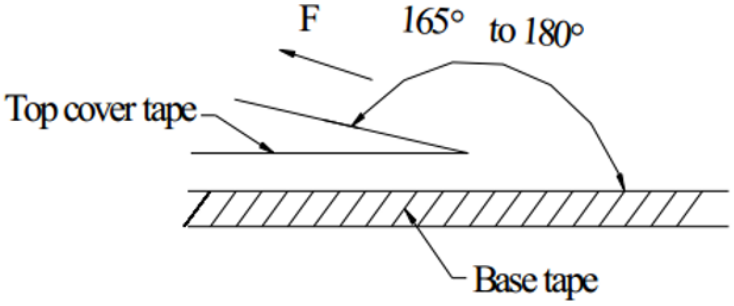

Copyright © by Walsin Technology Corporation. | All rights reserved.

10. Reliability Performance

Item	Specification and Requirement	Test Method
Solderability	1. No case deformation or change in appearance. 2. New solder coverage More than 95%.	1. Preheat : 155 °C ± 5 °C, 60S ± 2S. 2. Tin : lead-free. 3. Temperature : 240 °C ± 5 °C, flux 3.0S ± 0.5S.
Mechanical shock	1. No case deformation or change in appearance. 2. △L / Lo ≤ ± 10%.	1. Acceleration：100G. 2. Pulse time : 6ms. 3. 3 times in each positive and negative direction of 3 mutual perpendicular directions.
Mechanical vibration	1. No case deformation or change in appearance. 2. △L / Lo ≤ ± 10%.	1. Reflow : 2 times. 2. Frequency : 10Hz~55Hz~10Hz, 20 min / cycles. 3. Amplitude : 1.52 mm. 4. Directions : X, Y, Z. 5. Time : 12 cycle / direction.
Thermal Shock	Inductance change : Within ± 10% Without distinct damage in appearance.	1. First -55 °C for 30 minutes, last 125 °C for 30 minutes as 1 cycle. Go through 1000 cycles. 2. Max transfer time is 3 minutes. 3. Measured at room temperature after placing for 24 ± 2 hours.
Humidity Resistance	Inductance change : Within ± 10% Without distinct damage in appearance.	1. Reflow 2 times. 2. 85 °C, 85% RH, 1000 hours. 3. Measured at room temperature after placing for 24 ± 2 hours.
Low temperature storage	Inductance change : Within ± 10% Without distinct damage in appearance.	1. Temperature：-55 ± 2 °C. 2. Time：1000 hours. 3. Measured at room temperature after placing for 24 ± 2 hours.
High temperature storage	Inductance change : Within ± 10% Without distinct damage in appearance.	1. Temperature：+125 ± 2 °C. 2. Time：1000 hours. 3. Measured at room temperature after placing for 24 ± 2 hours.

Copyright © by Walsin Technology Corporation. | All rights reserved.