DATA SHEET

PRODUCT	**CHIP INDUCTORS**
SERIES	WCI1005CP
PART NO.	
DESCRIPTION	
ISSUE DATE	2023/07/03
REVISION DATE	2023/07/03
REFERENCE NO.	ENS000180740

RoHS COMPLIANCE ITEM

Disclaimer:
- This datasheet is downloaded from the Website of Walsin Technology Corporation, and Walsin Technology Corporation reserves all rights for modification content without further notification.
- All product, specification and data are subject to change without notice.
- Walsin Technology Corporation, its affiliates, agents, employees, and all persons acting on its or their behalf, hereby disclaim any and all liability for any errors, inaccuracies or incompleteness contained in any product related information, including but not limited to product specifications, datasheets, pictures and/or graphics.
- Walsin Technology Corporation makes no warranty, representation or guarantee regarding the suitability of the products for any particular purpose or the continuing production of any product. It is the customer's responsibility to validate that a particular product is suitable for use in a particular application.
- To the maximum extent permitted by applicable law, Walsin Technology Corporation disclaims (i) any and all liability arising out of the application or use of any product, (ii) any and all liability, including without limitation special, consequential or incidental damages, and (iii) any and all implied warranties, including warranties of fitness for particular purpose, non-infringement and merchantability.
- If you have any questions, please contact our sales staff.

Copyright © by Walsin Technology Corporation. | All rights reserved.

CHIP INDUCTORS Engineering Specification

1. Scope

- Ceramic core wire wound construction.
- Component miniaturization is more suitable for SMT layout use.
- Inductance values from 1.0 to 120 nH.
- The Q value is better than multilayer technology.

2. Explanation of Part Number

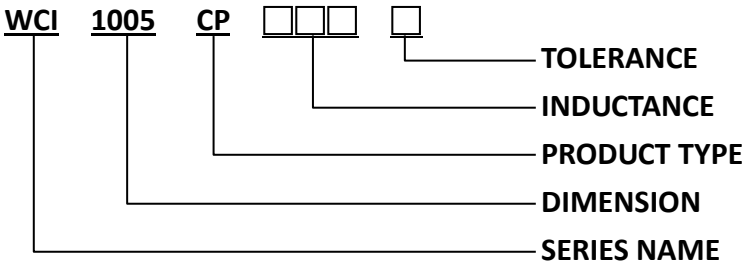

3. Shapes and Dimensions

UNIT: mm

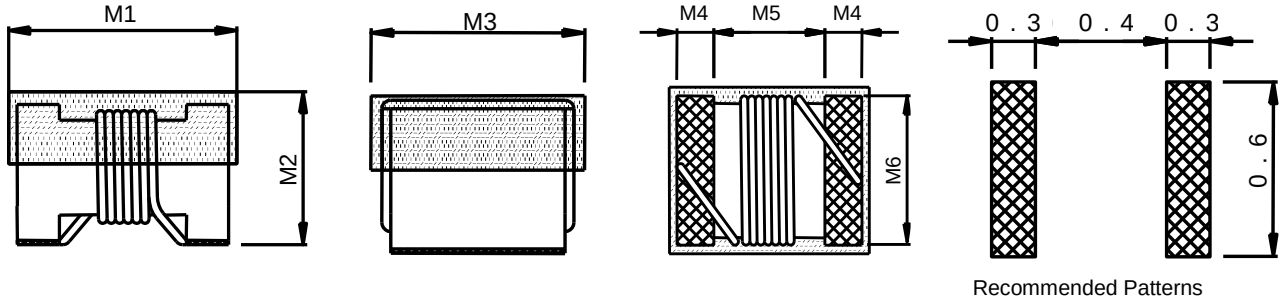

Recommended Patterns

Series	M1	M2	M3	M4	M5	M6
WCI1005CP	1.19 MAX.	0.66 MAX.	0.64 MAX.	0.23±0.1	0.56±0.1	0.50±0.1

4. General Technical Data

- OPERATING TEMPERATURE RANGE：-25℃ TO +125℃
- STORAGE TEMPERATURE RANGE：COMPONENT: -25℃ TO +85℃
- TEMPERATURE RISE：Below 15°C at Rated Current.

Copyright © by Walsin Technology Corporation. | All rights reserved.

5. Structure

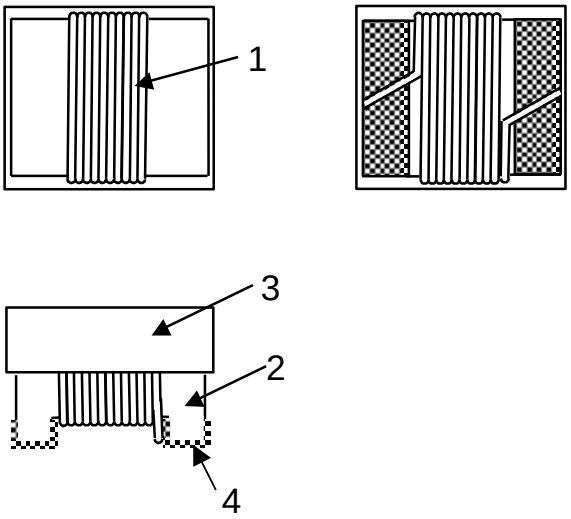

6. Material List

ITEM	MATERIAL CATEGORY	MATERIAL TYPE
1	WIRE	POLYSOL
2	CORE	CERAMIC
3	EPOXY	UV TYPE
4.	TERMINAL	Ag+Ni+Sn

7. Test Instrument

- **Inductance、Q : TEST BY KEYSIGHT E4991B or equivalent.**
- **SRF : TEST BY KEYSIGHT 5071C or equivalent.**
- **DC Resistance : TEST BY CHROMA 16502 or equivalent.**
- **Test Method:**
  Position coil under test as shown in below and contact coil with each terminal by adding weight.

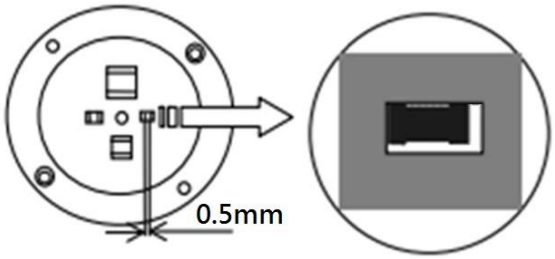

Copyright © by Walsin Technology Corporation. | All rights reserved.

8. Electrical Specification

Part number	Inductance (nH) @250MHz	Inductance Tolerance	Q MIN.	Inductance (TYP.) @900MHz	Q (TYP.) @900MHz	Inductance (TYP.) @1700MHz	Q (TYP.) @1700MHz	SRF (GHz) MIN.	DC Resistance (Ω) MAX.	Irms (mA)
WCI1005CP1N0□	1.0	B、C、D	16	1.02	75	1.02	70	12.70	0.045	1360
WCI1005CP1N2□	1.2	B、C、D	16	1.17	30	1.17	40	12.90	0.090	740
WCI1005CP1N8□	1.8	B、C、D	16	2.08	59	1.94	74	12.00	0.070	1040
WCI1005CP1N9□	1.9	B、C、D	16	1.72	65	1.74	80	11.30	0.070	1040
WCI1005CP2N0□	2.0	B、C、D	16	1.93	54	1.93	75	11.10	0.070	1040
WCI1005CP2N2□	2.2	B、C、D	19	2.19	55	2.23	82	10.80	0.070	960
WCI1005CP2N4□	2.4	B、C、D	15	2.24	51	2.27	70	10.50	0.068	790
WCI1005CP2N5□	2.5	B、C、D	15	2.37	33	2.38	53	10.40	0.150	660
WCI1005CP2N7□	2.7	B、C、D	16	2.58	42	2.60	61	10.40	0.120	640
WCI1005CP3N3□	3.3	B、C、D	19	3.10	65	3.12	80	7.00	0.066	840
WCI1005CP3N6□	3.6	B、C、D	19	3.56	45	3.62	71	6.80	0.066	840
WCI1005CP3N9□	3.9	B、C、D	19	3.89	50	4.14	72	6.00	0.066	840
WCI1005CP4N1□	4.1	B、C、D	18	3.89	50	4.14	72	6.00	0.066	700
WCI1005CP4N3□	4.3	B、C、D	18	4.19	40	4.30	71	6.00	0.091	700
WCI1005CP4N7□	4.7	B、C、D	15	4.78	47	4.59	62	4.70	0.13	640
WCI1005CP5N1□	5.1	B、C、D	20	5.16	52	5.19	76	4.80	0.083	800
WCI1005CP5N6□	5.6	G、J、K	20	5.20	48	5.28	75	4.80	0.083	760
WCI1005CP5N8□	5.8	G、J、K	20	5.60	48	5.63	74	4.80	0.083	760
WCI1005CP6N2□	6.2	G、J、K	20	6.15	50	6.20	73	4.80	0.083	760
WCI1005CP6N8□	6.8	G、J、K	20	6.73	65	6.95	70	4.80	0.083	680
WCI1005CP7N3□	7.3	G、J、K	20	7.51	60	7.89	80	4.8	0.100	680
WCI1005CP7N5□	7.5	G、J、K	22	7.91	60	8.22	85	4.80	0.100	680
WCI1005CP8N2□	8.2	G、J、K	22	8.53	64	8.81	88	4.40	0.100	680
WCI1005CP8N7□	8.7	G、J、K	18	8.78	54	9.21	73	4.10	0.200	480
WCI1005CP9N0□	9.0	G、J、K	22	9.07	65	9.53	83	4.16	0.100	680
WCI1005CP9N1□	9.1	G、J、K	22	9.27	63	8.61	73	4.16	0.100	680
WCI1005CP9N5□	9.5	G、J、K	18	9.64	62	9.93	56	4.00	0.200	480
WCI1005CP10N□	10	G、J、K	21	10.16	50	9.72	85	3.90	0.200	480
WCI1005CP11N□	11	G、J、K	24	10.89	53	11.46	77	3.68	0.120	640
WCI1005CP12N□	12	G、J、K	24	12.71	62	12.87	77	3.60	0.120	640
WCI1005CP13N□	13	G、J、K	24	13.4	51	14.63	57	3.45	0.210	440
WCI1005CP15N□	15	G、J、K	24	15.2	55	16.88	76	3.28	0.170	560
WCI1005CP16N□	16	G、J、K	24	16.43	45	18.79	49	3.10	0.220	560
WCI1005CP18N□	18	G、J、K	25	17.39	52	22.18	64	3.10	0.230	420
WCI1005CP19N□	19	G、J、K	24	19.51	60	21.85	72	3.04	0.200	480
WCI1005CP20N□	20	G、J、K	25	20.7	52	23.66	53	3.00	0.250	420
WCI1005CP22N□	22	G、J、K	25	22.33	57	26.54	53	2.80	0.300	400
WCI1005CP23N□	23	G、J、K	22	23.8	49	26.85	64	2.72	0.300	400
WCI1005CP24N□	24	G、J、K	25	25.59	59	31.06	56	2.70	0.300	400
WCI1005CP27N□	27	G、J、K	24	29.26	45	32.56	62	2.48	0.300	400
WCI1005CP30N□	30	G、J、K	25	31.9	45	40.38	41	2.35	0.300	400
WCI1005CP33N□	33	G、J、K	24	34.12	35	40.32	36	2.35	0.440	400
WCI1005CP36N□	36	G、J、K	24	39.5	45	48.4	53	2.32	0.440	320
WCI1005CP39N□	39	G、J、K	25	42.65	45	50.96	42	2.10	0.550	200
WCI1005CP40N□	40	G、J、K	24	39.0	44	47.41	35	2.24	0.440	320
WCI1005CP43N□	43	G、J、K	25	45.8	46	61.55	35	2.03	0.810	100
WCI1005CP47N□	47	G、J、K	20	52.85	42	-	-	2.10	0.830	150
WCI1005CP51N□	51	G、J、K	25	56.6	40	-	-	1.75	0.820	100
WCI1005CP56N□	56	G、J、K	22	58.59	40	-	-	1.76	0.970	100
WCI1005CP57N□	57	G、J、K	22	60.15	40	-	-	1.76	0.970	100
WCI1005CP62N□	62	G、J、K	22	64.95	40	-	-	1.76	1.620	100

Copyright © by Walsin Technology Corporation. | All rights reserved.

Part number	Inductance (nH) @250MHz	Inductance Tolerance	Q MIN.	Inductance (TYP.) @900MHz	Q (TYP.) @900MHz	Inductance (TYP.) @1700MHz	Q (TYP.) @1700MHz	SRF (GHz) MIN.	DC Resistance (Ω) MAX.	Irms (mA)
WCI1005CP68N□	68	G、J、K	22	72.17	40	-	-	1.62	1.120	100
WCI1005CP72N□	72	G、J、K	20	-	-	-	-	1.26	2.000	30
WCI1005CP75N□	75	G、J、K	20	-	-	-	-	1.62	2.000	50
WCI1005CP82N□	82	G、J、K	20	-	-	-	-	1.26	1.550	50
WCI1005CP91N□	91	G、J、K	22	-	-	-	-	1.26	2.000	50
WCI1005CPR10□	100	G、J、K	20	-	-	-	-	1.16	2.000	30
WCI1005CPR12□	120	G、J、K	20	-	-	-	-	1.90	2.200	50

NOTE:

1. □Tolerance: K:±10%、J:±5%、G:±2%、D:±0.5 nH、C:±0.2 nH、B:±0.1 nH

2. MSL: Level 1

9. Electrical Curve

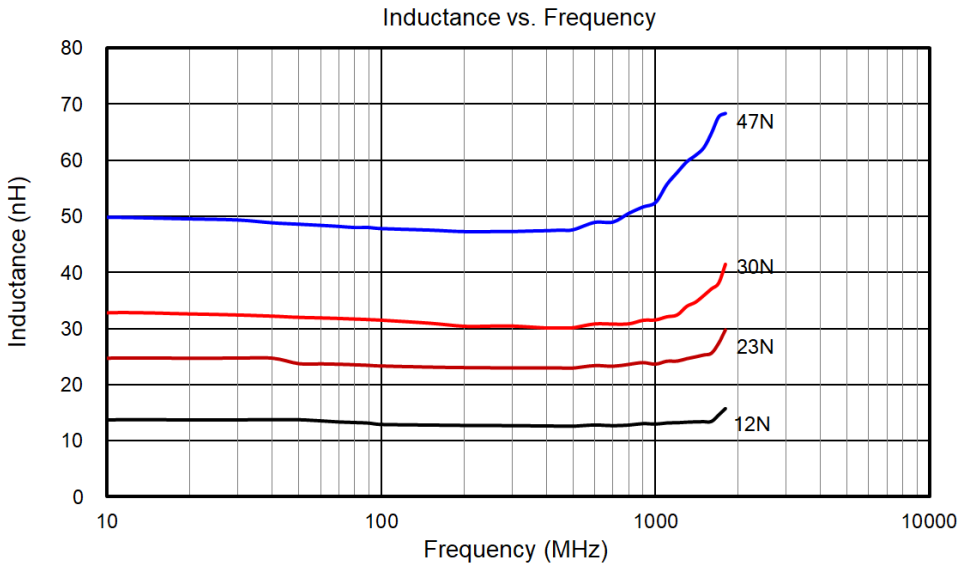

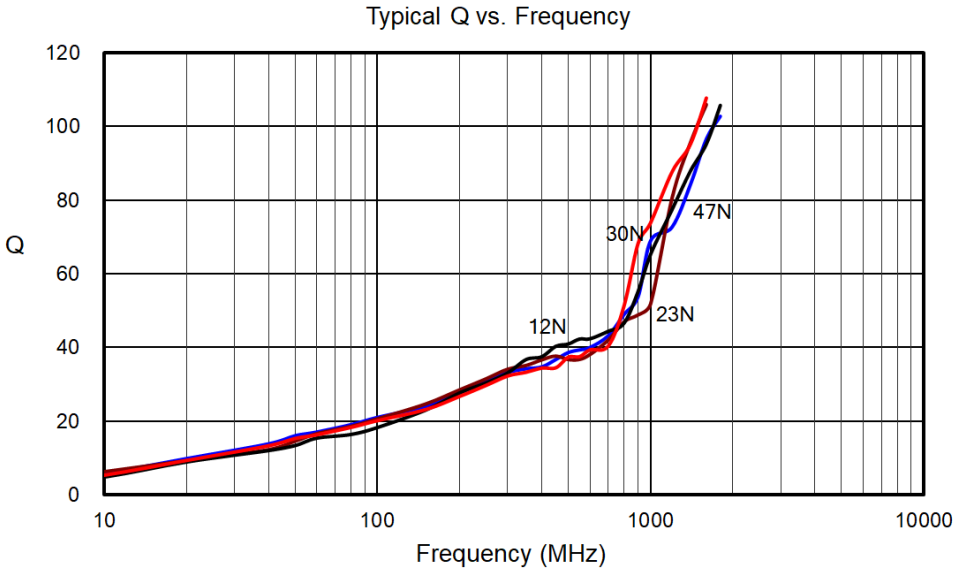

Copyright © by Walsin Technology Corporation. | All rights reserved.

10. Packing

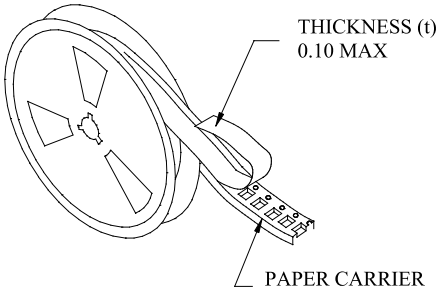

- THE FORCE FOR TEARING OFF COVER TAPE IS 10 TO 100 GRAMS IN THE ARROW DIRECTION.

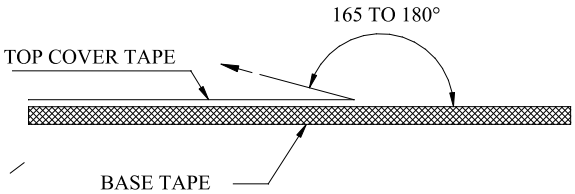

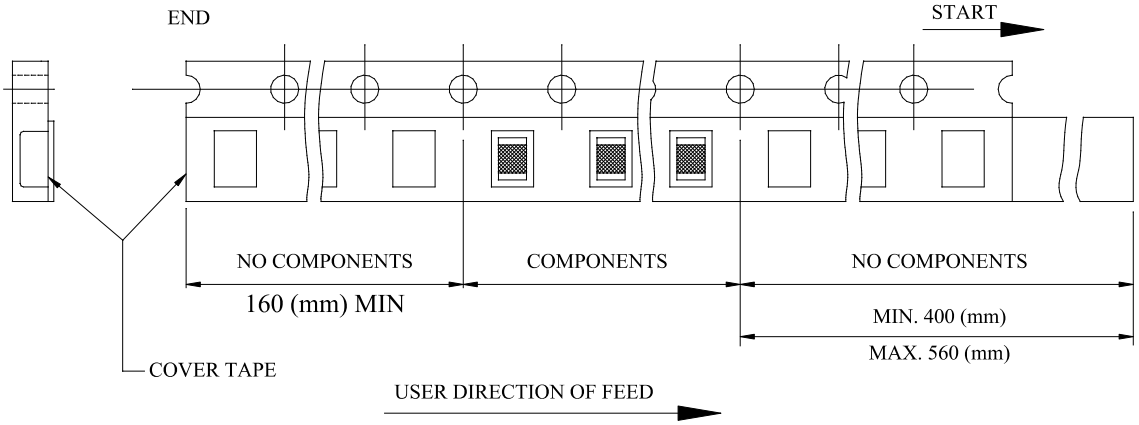

■ CARRIER TAPE REELS (mm)

MATERIAL:PAPER

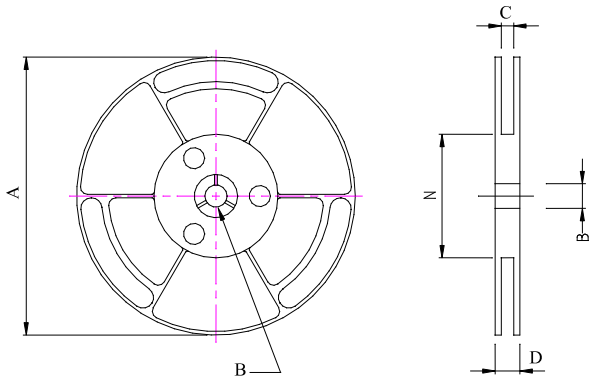

■ DIMENSIONS OF CARRIER TAPE (mm)

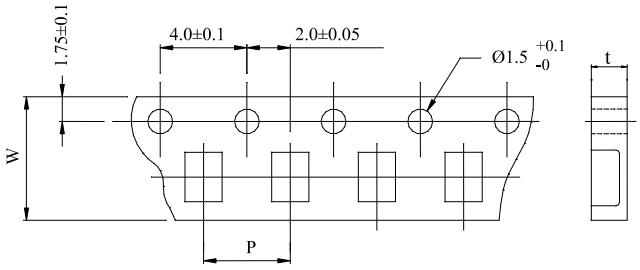

UNIT: mm

	A	B	C	D	N	P	W	t
DIM.	178	13.0	8.4	14.4	50	2.0	8.0	0.68
TOL.	MAX.	+0.5–0.2	+2.0–0	MAX	MIN.	±0.1	±0.2	±0.03

Quantity : 4,000 Pcs/Reel

Copyright © by Walsin Technology Corporation. | All rights reserved.

11. Recommended Soldering Conditions

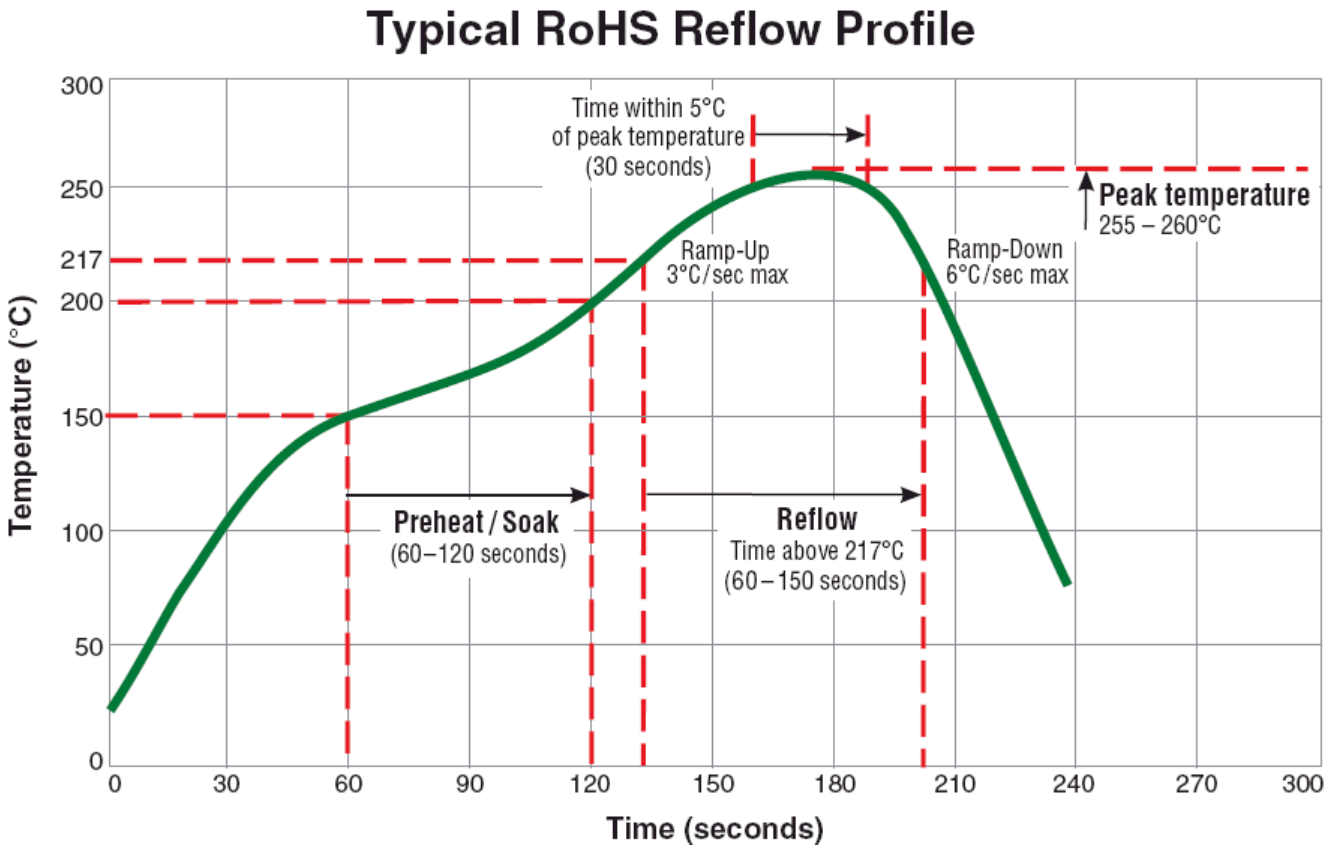

Copyright © by Walsin Technology Corporation. | All rights reserved.

12. Reliability Performance

Reliability Experiment For Electrical

Test Item	Accept criteria	Test Condition	Standard Source
Humidity Test	1.Change from an initial value L:within±5% 2.no visible damage.	+40℃± 2℃, humidity of 90% ±5% (total 96 hours).	MIL-STD-202H Method 103 Test Condition B
High Temperature Test	1.Change from an initial value L:within±5% 2.no visible damage.	1.Temperature: +125℃±2℃. 2.Test time: 72±2hrs.	IEC 68-2 Test Condition B
Low Temperature Test	1.Change from an initial value L:within±5% 2.no visible damage.	1.Temperature: -25℃±2℃. 2.Test time: 72±2hrs.	IEC 68-2 Test Condition A
Thermal Shock	1.Change from an initial value L:within±5% 2.no visible damage.	+125℃±5℃ (30 minutes) ~ -65±5℃ (30 minutes), temperature switch time: 5 minutes (total 50 cycles).	Reference MIL-STD-202H Method 107 Test Condition B-2
Life Test	1.Change from an initial value L:within±5% 2.no visible damage.	+70℃±5℃ (250Hours).	Reference MIL-STD-202H Method 108 Test Condition B

Reliability Experiment For Physical

Test Item	Accept criteria	Test Condition	Standard Source
Vibration Test	1.Change from an initial value L:within±5% 2.no visible damage.	10-55-10HZ, amplitude: 1.5mm, direction: X, Y, Z axes, each axis 2 hours (total 6 hours).	MIL-STD-202H Method 201
Solder Heat Resistance Test	1.no visible damage.	IR/convection reflow: Peak Temp 250±5℃ for 30±5Sec. in air, Through 3 Cycle. Temperature Ramp:+1~4°C/sec.; Above 183°C, must keep 90 s - 120 s.	Reference MIL-STD-202H Method 210 Test Condition K (Reflow)
Solder Ability Test	1. Lead must have 95% above coverage.	Solder temp: 245±5℃, Immersion time: 5 second. Immersion rate: 25±6mm/sec.	J-STD-002D Test condition B1

Copyright © by Walsin Technology Corporation. | All rights reserved.